

ROU Materiaal in the Afrikaans language means raw material.

ROU Materiaal was founded in **Ravenna, Italy, in 2013**.

ROU Materiaal designs and crafts unique pieces of art-design with an eclectic use. These Italian **hand made sculptures** can be used as stand alone tables or wall-mounted sculptures. They are crafted from both solid secular wood and more recently from MDF, being treated with resins, acrylics, sand, cement and other materials.
We also produce **hand-painted art fabrics** that can be used as tapestries or for upholstery.

ROU Materiaal came about when Marzia met Monica, sharing passion for art and design. This led to the creation of ROU Materiaal which expresses their creative interest in **exploring the world of handcrafting and experimenting using various materials to create custom made projects**. Finished textures become a field of research. ROU Materiaal experiments on large linen canvases as well as on solid wood pieces. The finished textured surfaces conjure up images varying from stones and rocks through to lunar landscapes and water.







S C U L P T U R E _ T A B L E S

Rou Materiaal designs and manufactures in Italy massive wooden sculptures in unique pieces using domestic raw materials, natural, treated with resin, sand or other techniques.

The **ROU Materiaal sculpture - tables** come from **ROU Materiaal sculptures** that in some cases can be used also in a functional way.

Art and design merge in a unique work. The woods are treated in such a way as to combine the use of techniques that enhance veins or natural imperfections with others that give a more contemporary texture, such as fire, sand, gilding and resins.

Sculpture tables can be customized, legs and tops can be changed.

BIG TESSELLA - Bisanzio collection

Dining table composed by seven handmade,
one-piece, MDF, resin, acrylic, hand-painted sculptures.
Size top: length 300 cm x width 137 cm x thickness 6 cm
Legs in MDF height 76 cm



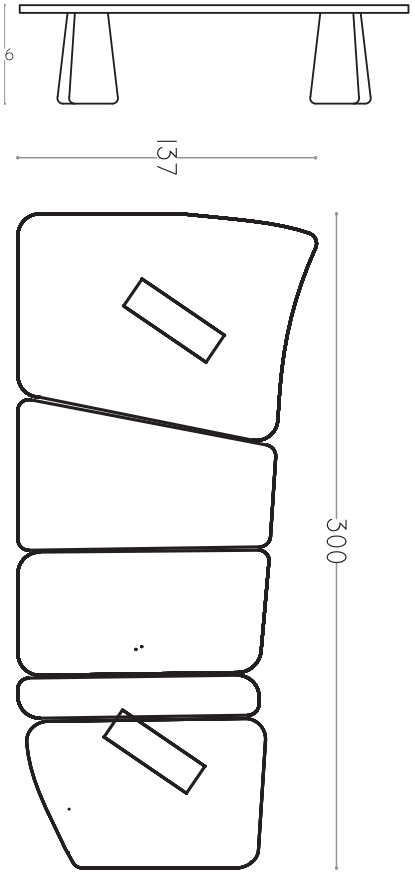





OPAQUE ROAD - STONES collection

Sculptural dininig table in MDF, resin, a
crylics and hand-painted.
Lenght 202cm, width 112cm, height 75,5cm



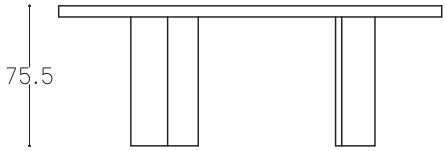

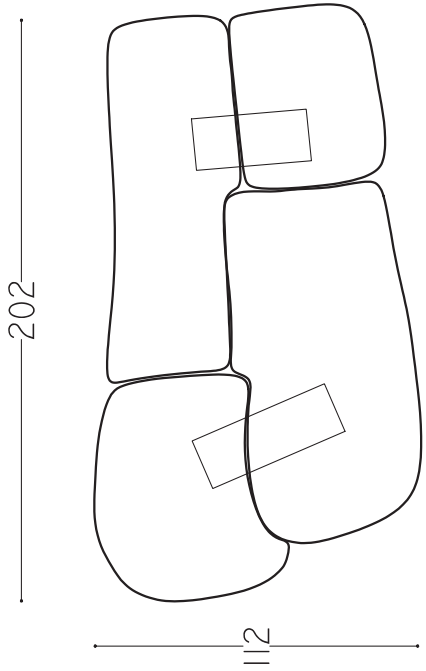



SOFT PEBBLES - STONES collection

Sculptural console in MDF, resin, acrylics
and handpainted.
Lenght 142cm, width 55cm, height 80cm



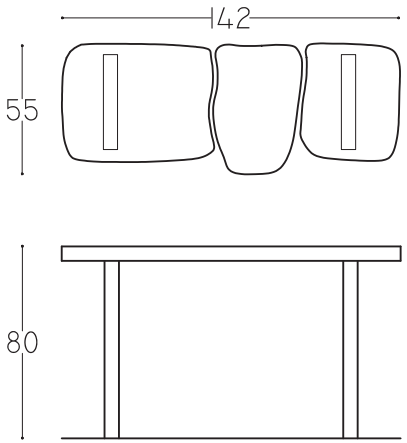



DESERTO NERO - AlUla collection

Dining table in elm solid wood, resin,
acrylics, handpainted.
Lenght 280 cm, width 80 cm, height 72 cm





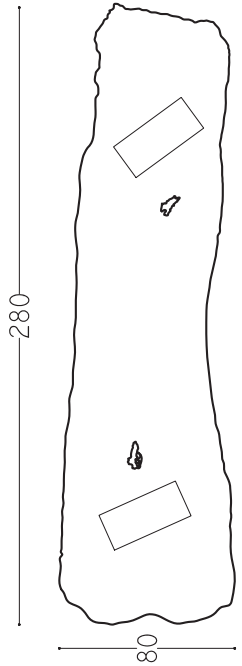

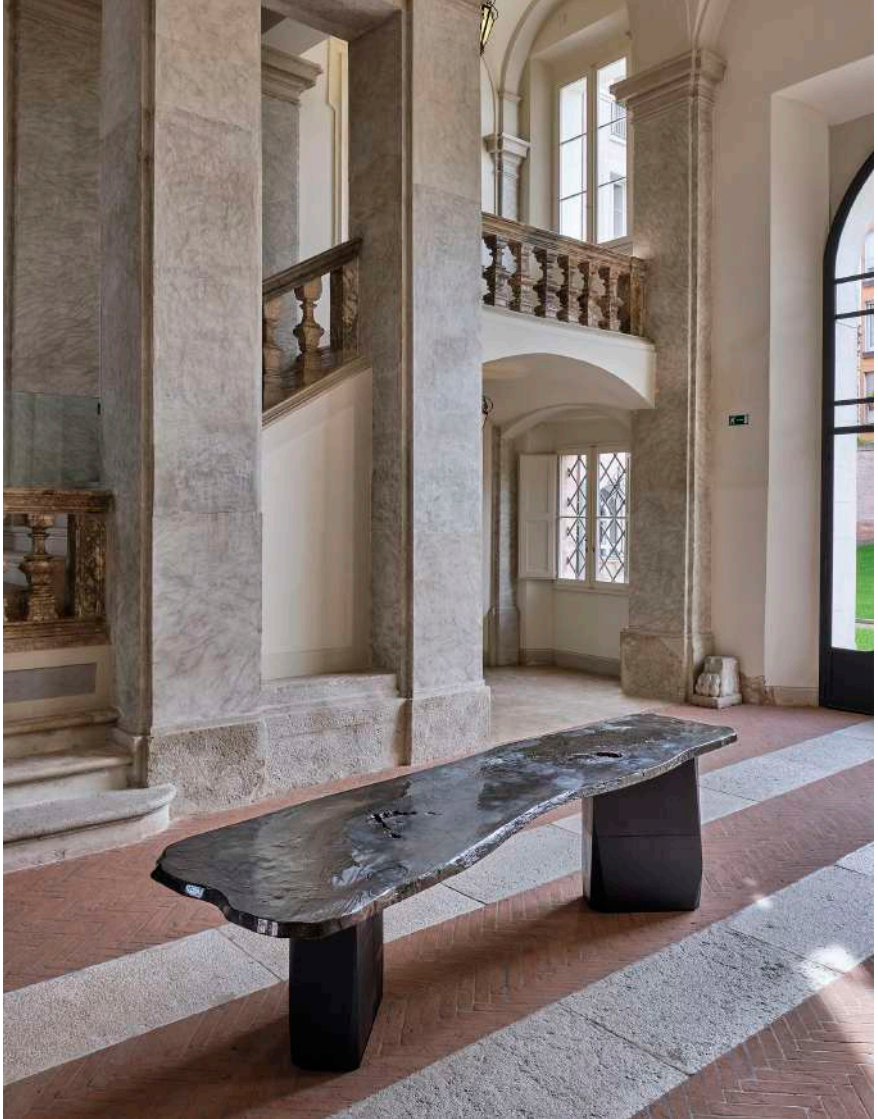

BLACK DOLMEN - AlUla collection

Dining table in elm solid wood, resin, sand, handpainted.
Lenght 221 cm, width from 67 to 96 cm, height 72 cm.
Handmade fir wood legs.



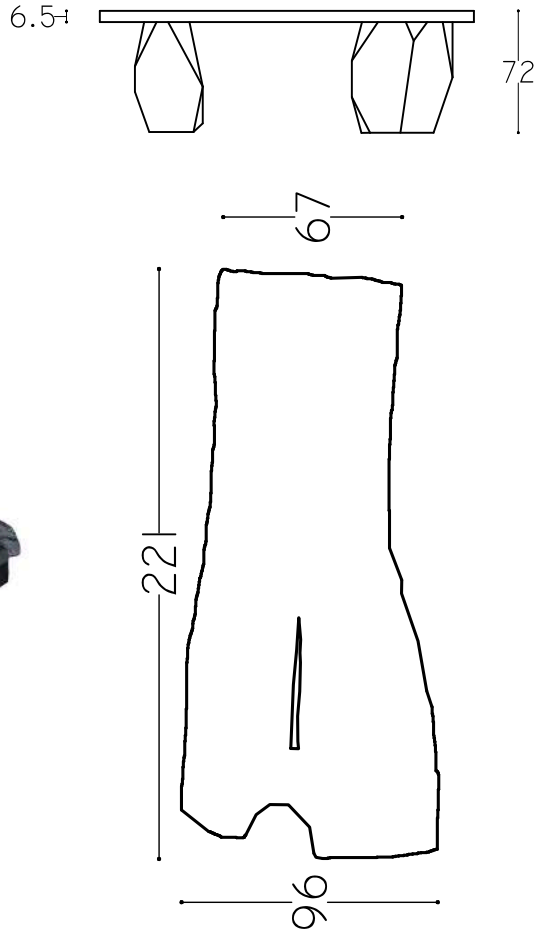





VIA DELL'INCENSO - AlUla collection

Long coffee table in elm solid wood, resin,
acrylics, handpainted.
Lenght 280 cm, width 50 cm, height 33 cm



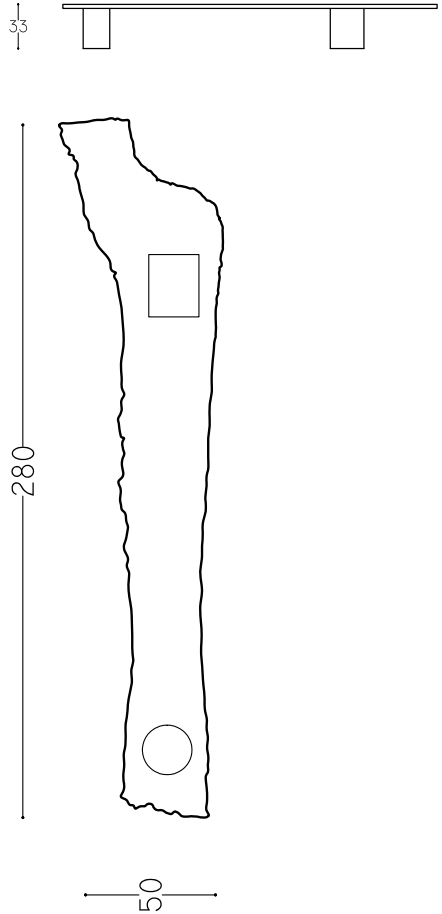



GLACIAZIONE

Handmade consolle in pawlonia solid wood, resin, paint and stucco.
Size top: length about 166 cm x width max 49 cm x thickness 4,5 cm
legs in iron height about 85 cm



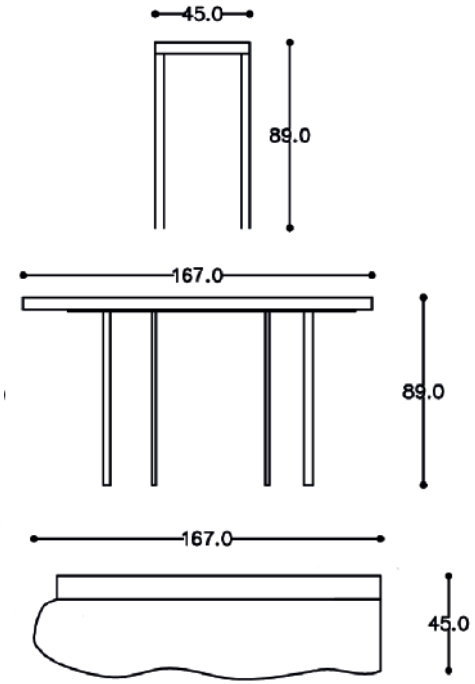



CATRAME

Handmade desk in ginkgo biloba solid wood, resin, acrylics, handpainted.
Size top: length about 180 x width 65 x thickness 3 cm
1 leg in iron height about 72 cm
1 leg in mdf height about 72 cm



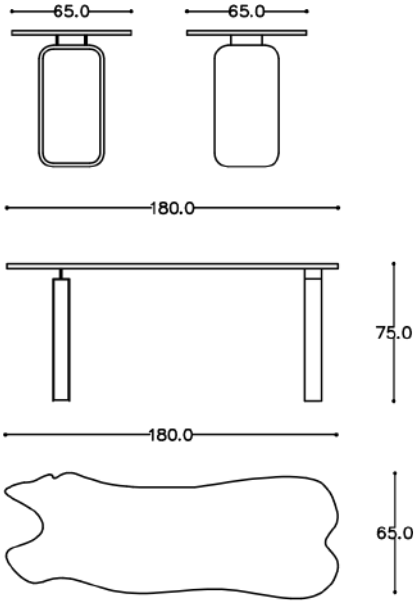



GINKGO MACHIA

Handmade diningtable in ginkgo biloba solid wood, resin, acrylics, handpainted.
Size Top: length about 240 x width 100 x thickness 3,5 cm
2 legs in painted pir height 72 cm



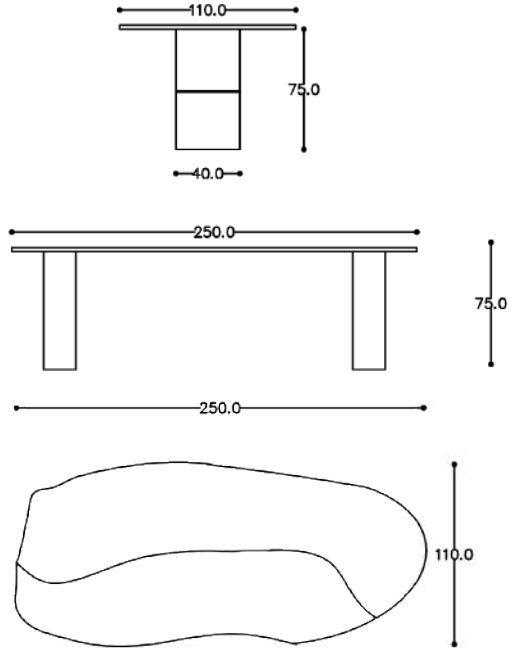





FLUIDO

Ginkgo biloba solid wood,
resin, acrylics, handpainted.
Size top: length about 163 cm x 65 cm x 3 cm



PERITO MORENO

Elm solid wood, resin,
acrylics, handpainted.
Size top lenght about 140 cm x 70 cm x 12 cm









I_CONIC LARGE - Bisanzio collection

Side table in cedar solid wood, resin, acrylics, handpainted and hand-painted acrylic resin.
Diameter 65 cm, thickness 7 cm
Leg in MDF diameter max 55 cm, h 23 cm







I_CONIC TALLEST - Bisanzio collection

Side table in cedar solid wood, resin, acrylics, handpainted and hand-painted acrylic resin.
Diameter 54 cm, thickness 4,5 cm
Leg in MDF diameter max 45 cm, h 32 cm





ROCCE TRAFITTE - AlUla collection

Coffee table in paulownia and elm
solid wood, resin, acrylics, handpainted.
Lenght 110 cm, width 50 cm, height 25 cm







ANTARTICOS SUPERBIG
- Antarticos collection

Sculpture-coffee table in elm solid wood, resin, acrylics, handpainted.
Base: 65 cm x 65 cm, height 30 cm
Top: diameter about 67 cm, thickness 11 cm







ANTARTICOS MEDIUM
- Antarticos collection

Side table in cedar solid wood, resin, acrylics, handpainted.
Diameter about 50 cm, thickness 3 cm
Cylindric metal base h 36 cm





ANTARTICOS TALLEST
- Antarticos collection

Side table in cedar solid wood, resin, acrylics, handpainted.
Diameter about 50 cm, thickness 4 cm
Cylindric metal base h 41 cm





ALAE - Domus collection

Coffee table in pawlonia solid wood, resin, acrylics, handpainted.
Lenght 102 cm, width 49 cm, thickness 3,5 cm
Elliptical wood base h 27 cm, customizable







POMPEI - Domus collection

Coffee table in elm solid wood, resin, acrylics, handpainted.
Lenght 143 cm, width 80 cm, thickness 4 cm
Double parallelepiped metal base h 30 cm

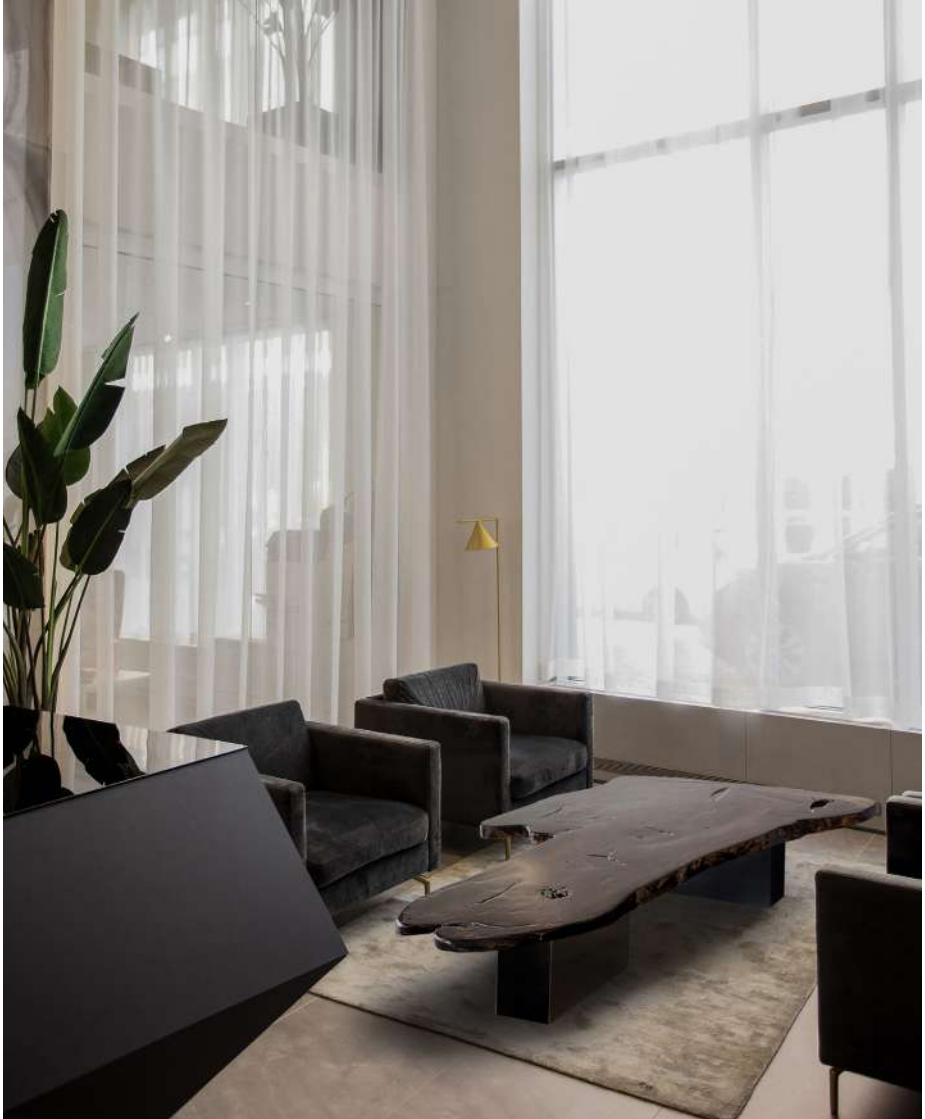

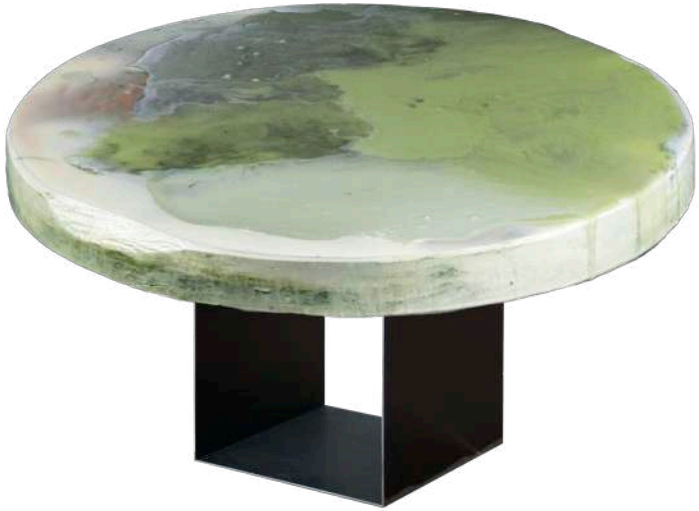

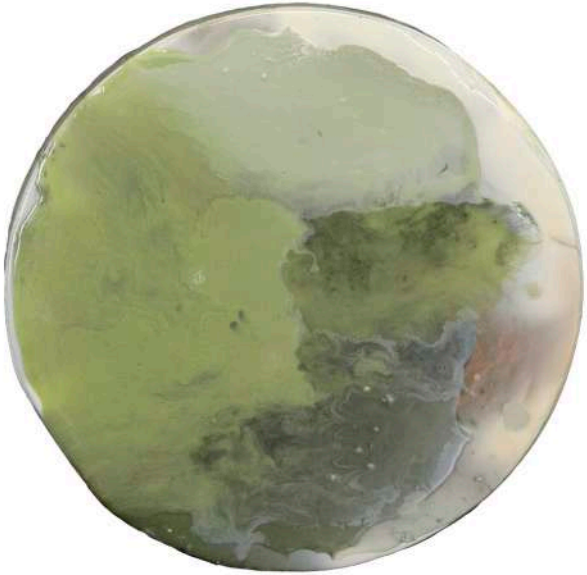

HERBOSUS 1 - Terrae collection

Side table in cedar solid wood, resin, acrylics, handpainted.
Diameter about 48 cm, thickness 4,5 cm
Parallelepiped metal base h 30 cm, customizable







TABERNAE - Domus collection

Coffee table in cedar solid wood, resin, acrylics, handpainted.
Diameter about 55 cm, thickness 4 cm
Cylindric metal base h 30 cm, customizable







LACERTUM - Domus collection

Coffee table in cedar solid wood, resin, acrylics, sand, cocciopesto, handpainted.
Diameter about 73 cm, thickness 4 cm
Parallelepiped metal base h 30 cm, customizable









TRITTICON 1.2.3

Ginkgo biloba solid wood, resin, acrylics and gold leaf.
Size each: length about 105 cm x 50 cm x 5 cm
Elliptical leg in wood size 33,5 cm x 11,5 cm x height 27 cm





GINKGO MACHIA COFFEE TABLE

Coffee table in solid tulipwood, resin, acrylics, handpainted and iron legs.
Lenght 115 cm, width 80 cm, height 35 cm

Price: € 6.667 each











SEZIONI ORGANICHE













Cuts in solid wood, resin, handpainted (unique pieces) aproximate diam. 39 x h 7 cm.

















EBULLITUS - Terrae collection

Sezione organica in cedar solid wood,
resin, acrylics, handpainted.
Diameter about 37 cm, thickness 7,5 cm



ERUPTIO - Terrae collection

Sezione organica in cedar solid wood,
resin, acrylics, handpainted.
Diameter about 32 cm, thickness 4 cm





AYERS ROCK TABLE

AYERS ROCK SCULPTURE





GEYSER - Terre collection

Side table in cedar solid wood, resin, acrylics, handpainted.
Diameter about 66 cm, thickness 4 cm
Metal base h 35 cm, customizable



SAVANA - Terre collection

Side table in elm solid wood, resin, acrylics, handpainted.
Diameter about 66 cm, thickness 4 cm
Metal base h 35 cm, customizable





ART FABRICS

Our art fabrics are handmade in unique pieces, in Italy. We paint Italian linen canvas using ancient techniques typical of our region (Emilia Romagna) reinterpreted in a contemporary way.

During this process we sometimes use also ancient molds. Each piece is identified with a name and collection.

Our art fabrics can be used as tapestry, furnishing art-fabrics, art towels and raw material forcustom-fashion.

STRATIFICAZIONI Collection 01
Custom project

Contemporary art fabric
Handpainted on linen using
traditional techniques and resin.
Size: 100 cm x 170 cm x 6 cm





GREENGREY
Bisanzio collection

Unique piece, hand painted tapestry by ROU Materiaal.
Size: 60 cm x 70 cm x 75 cm





DESERTO ROSSO
AlUla collection

Contemporary art fabric.
Handpainted on linen using traditional techniques.
Size: 300 cm x 150 cm









KAKADU
GRAFITI collection

Contemporary art fabric
Handpainted on linen using traditional techniques and resin.
Size: 30 cm x 170 cm x 7 cm





TRACCIA

Contemporary art fabric
Handpainted on linen using traditional techniques and resin.
Iron frame 3 mm
Size: 60 cm x 90 cm x 6 cm



GORGONI
Abissi collection

Contemporary art fabric
Handpainted on linen using
traditional techniques.
Size: 126 cm x 200 cm x 7 cm









STRATIFICAZIONI Collection 02

Contemporary art fabric
Handpainted on linen using
traditional techniques.
Size: 122 cm x 157 cm x 7 cm





LAAS GAAL
Graffiti collection

Contemporary art fabric
Handpainted on linen using
traditional techniques.
Size: 150 cm x 300 cm

SANTA MARIA IN PORTO
Basiliche collection

Contemporary art fabric
Handpainted on linen using traditional techniques.
Size: 150 cm x 250 cm









CUSTOM MADE PROJECTS

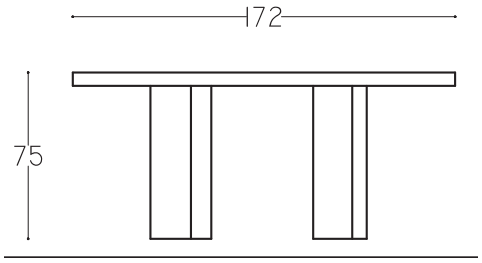

DINING TABLE
Custom made project
Private house - Italy

Dinning table in mdf, resin, acrilics. Handpainted.
Lenght 173cm, width 180cm, height 74cm

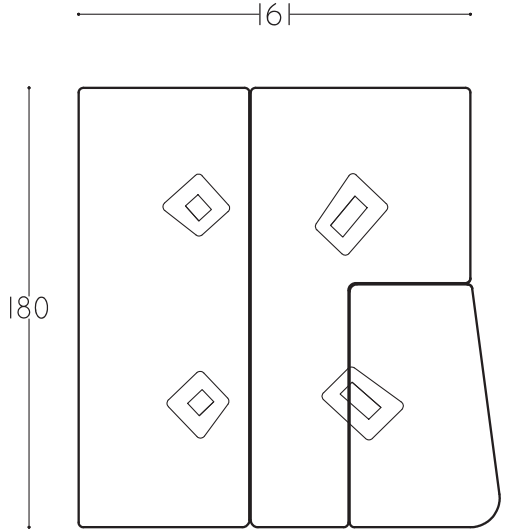





ARCHIPEL
Custom made project
Restaurant Nomicos - Paris 16me

Sculptures de table “Archipel”
in oak wood.





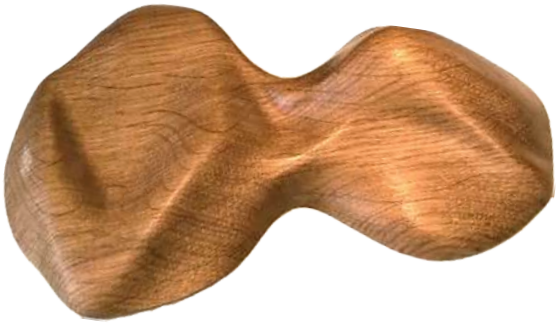





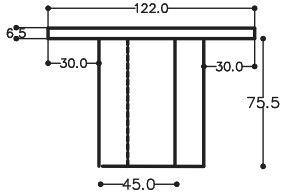

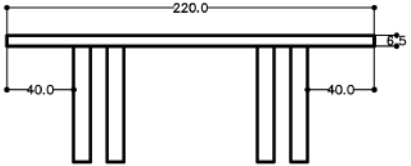

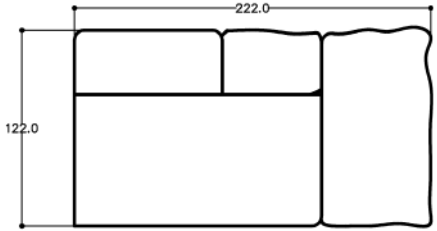

TESSELLA
Custom made project
Private house - Italy

Handmade table in iroko, niangon and mahogany wood, resin, acrylics, handpainted.
4 legs in fir wood, size 45 cm x 10 cm x h 75,5 cm
Size top: length about 220 cm x 122 cm x h 75,5 cm




SOL. 2
TESSELLA
H 75.5
Top incluso
sp. 6.3
10
46
69





All feet are customizable and subject to a surcharge for material and color and other bespoke options.

Prices may vary due to the increase in raw materials for pieces not available at the time of the request.

ROU ateriaal

Viale L. C. Farini 62
48121 Ravenna, Italy

T . +39 348 1532762
T . +39 335 8026662

roumateriaal@gmail.com
www.roumateriaal.com